EKL AG | Nadlerstraße 8 - 10 | 88299 Leutkirch im Allgäu
Tel: +49 (0)7561 9837-0 | info@ekl-ag.de
www.ekl-ag.de



EKL 22206

65W TDP Premium Cooler for INTEL® Socket LGA 17XX / 1851

Optimum cooling performance for INTEL® processors

Product description

The EKL 22206 dissipates the heat of your processor ideally and reliably. Thanks to its low height of just 123 mm, the EKL 22206 is suitable for all standard systems and workstations. The screw mounting developed for the Intel® LGA 1700 socket is particularly simple and secure: place the backplate, attach the cooler, tighten the 4 spring screws - done. The built-in fan has a 4-pin connection and can therefore be controlled manually via the mainboard. This enables an adjustable speed range of 500 - 1800 rpm.

Main features

- Powerful tower design
- Secure and stable screw mounting with included backplate for Intel® socket LGA 17XX
- High-performance thermal paste
- Quiet and low-vibration 92 mm PWM fan

Advice & ordering: **+49 (0)7561 9837-0** **info@ekl-ag.de**

* Thermal and mechanical compatibility may vary depending on the system used
** According to manufacturer specifications

EKL 22206 Technical data





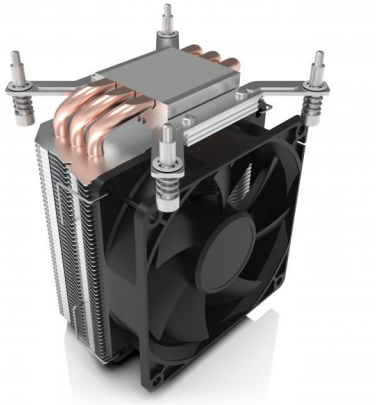

Cooler properties

Retail article number	22210121006
EAN Retail	4250280331820
Power loss	65W TDP
Material	Aluminium + copper
Weight	440 g
Packaging unit	8
suitable for	INTEL® Socket LGA 17XX / 1851

Fan properties

Width	71.4 mm
Length	101.4 mm
Height	123 mm
Speed min.	500 U/min
Speed max.	1800 U/min
Warehouse	Hydraulic bearing
Operating voltage	12 VDC
Volume flow	48.25 m³/h
Noise level min.	22.8 dB(A)
Service life L10	25000 h by 25 °C

EKL 22206 Dimensions

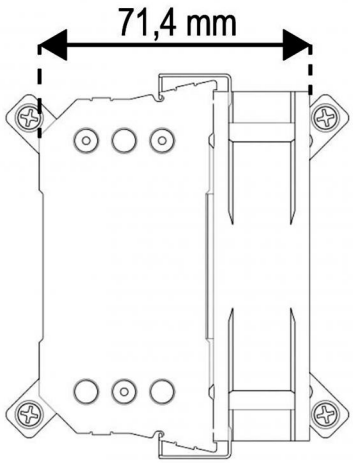

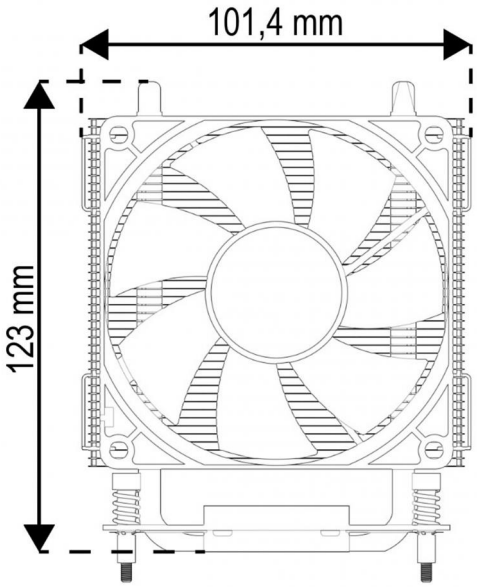

* Thermal and mechanical compatibility may vary depending on the system used
** According to manufacturer specifications