EKL AG | Nadlerstraße 8 - 10 | 88299 Leutkirch im Allgäu
Tel: +49 (0)7561 9837-0 | info@ekl-ag.de
www.ekl-ag.de

EKL 84403

for INTEL® Socket 1700, 1851
for AMD AM5

Product description

This state-of-the-art water cooler combines first-class workmanship and innovative technology to offer you unrivalled cooling performance.

The pump unit impresses with its diamond-cut copper base plate, which is equipped with large micro-channels. This design enables the waste heat from the processor to be dissipated quickly and efficiently to the cooling circuit.
Driven by a powerful three-phase motor that reaches up to 3100 rpm, the pump ensures a balanced performance spectrum and provides the necessary resources in every situation.
Thanks to the intelligent cooling circuit routing inside the pump housing, not only is the noise level reduced, but the cooling capacity and service life are also significantly increased compared to conventional designs, resulting in maintenance-free operation for up to 5 years.

Main features

EKL 84403 Technical data





Cooler properties

Retail article number	84400000003
EAN Retail	4250280350401
Material	Aluminium + copper

Fan properties

Width	120 mm
Length	120 mm
Height	25 mm
Speed min.	700 U/min
Speed max.	3100 U/min
Warehouse	Double ball bearing
Operating voltage	12 VDC
Volume flow	145.16 m³/h
Noise level min.	45.9 dB(A)
Service life L10	40000 h by 40 °C

EKL 84403 Dimensions

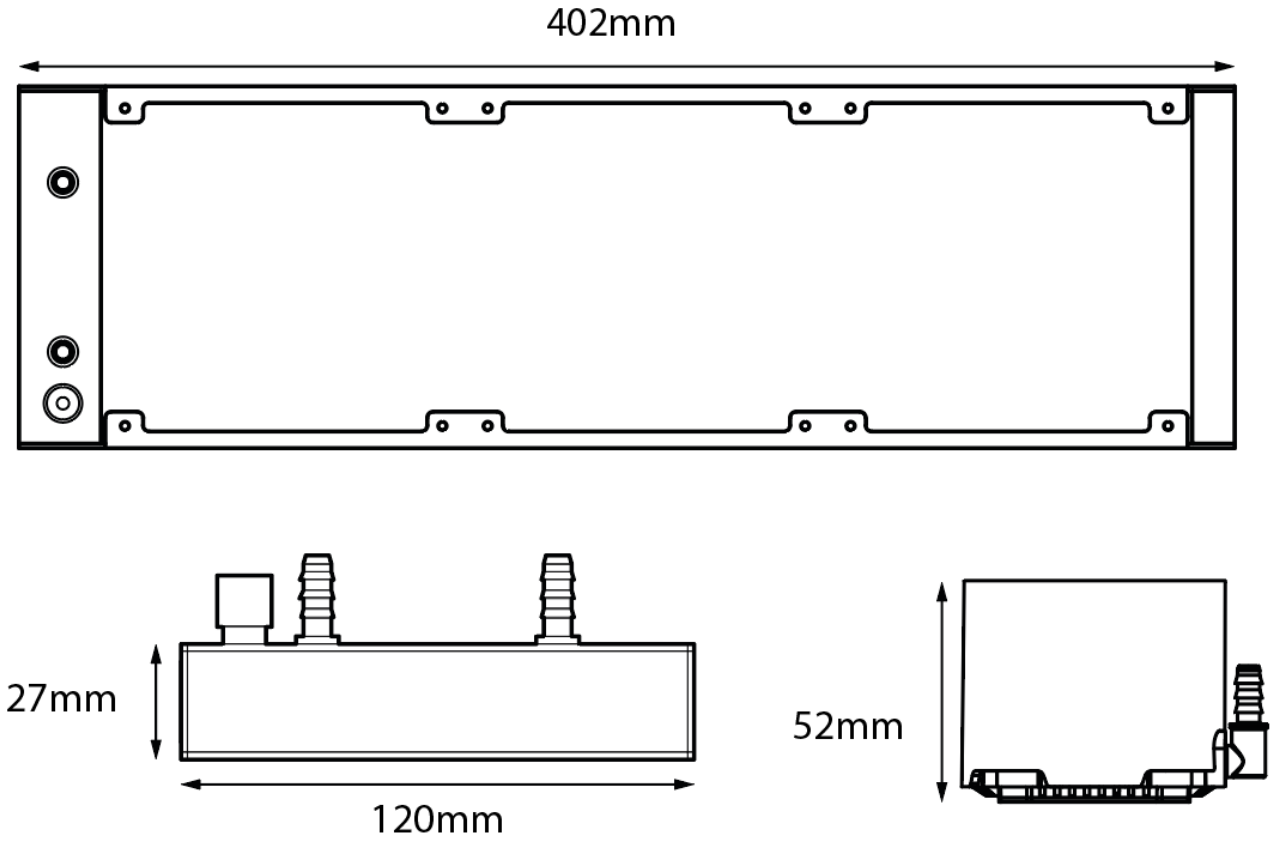

EKL 84403 Further data

pump

The diamond-cut copper base plate of the pump unit has large micro-channels to quickly and efficiently dissipate the waste heat from the processor to the cooling circuit. A powerful three-phase motor with 3100 rpm offers an extremely well-balanced power spectrum for the pump unit to provide the necessary resources in every situation.
An intelligent cooling circuit routing inside the pump housing also reduces the background noise of the pump unit and increases the cooling performance and service life compared to conventional designs, making it maintenance-free for up to 5 years.

Radiator

Our professional AIO uses a high-performance aluminium radiator with a "leak-free" design. In the very unlikely event of a leak in the cooling system, the pressure in the cooling circuit is automatically regulated, preventing any possible leakage of coolant.